Low Noise, High Linearity Double-Balanced Active Mixers Using Lossless Feedback

Chris Trask
Sonoran Radio Research
P.O. Box 25240
Tempe, AZ 85285-5240
Email: ctrask@primenet.com

***Abstract* - A further development in the application of single-transformer lossless feedback to improve the performance of double-balanced active mixers is described, in which the significant sources of noise are removed without impairing the intermodulation performance. Noise figures of better than 6dB are obtained while continuing to enjoy IIP_3 performance of better than +25dBm with a local oscillator power of just 0dBm. A brief discussion of lossless feedback double-balanced active mixers is provided, and a generalized topology for low-noise lossless feedback mixers is described. Test data describing the intermodulation and noise performance of a specific example is presented.**

I. Introduction

Designers of communications receivers and telecommunications systems have long sought ways to improve the dynamic range of receiver front ends, modulators, and demodulators, as well as decreasing the power supply demands in portable communications equipment. While numerous solutions exist for the design of low-noise amplifiers with high intermodulation distortion (IMD) performance, the mixer remains the weak link. Diode ring mixers provide suitable noise figure (NF) and IMD performance, but usually at the expense of excessive local oscillator (LO) power.

Recently, the methods of series/shunt [1] and lossless feedback [2] used to linearize small-signal amplifiers have been employed for linearizing active mixers [3, 4, 5, 6]. These methods provide high levels of IMD performance while requiring very little LO power, but have thus far been lacking in the improvement of the NF over the more traditional transistor tree mixer (aka Gilbert Cell). Subsequently, an advancement in the application of lossless feedback to active mixers has been realized that greatly improves the NF of the double-balanced active mixer while retaining the higher levels of IMD performance of earlier topologies, and a portion of the results are presented herein.

II. Lossless Feedback Active Mixers

The lossless feedback active mixer, described in Fig. 1, has been shown earlier to provide a high degree of IMD performance while requiring a considerably less LO power than is required of Class III diode ring mixers having comparable performance [6]. However, the topology has provided little improvement in the NF of earlier active mixer topologies.

In the lossless feedback active mixer, an input IF (or RF) signal having amplitude A and frequency ω_S is applied differentially to the input terminals of a pair of lossless feedback transformers T_3 and T_4, which results in a pair of differential input currents

$$I_{in+} = I_Q + \frac{A \times Cos\ \omega_S\ t}{R_{in}} \tag{1}$$

$$I_{in-} = I_Q - \frac{A \times Cos\ \omega_S\ t}{R_{in}} \tag{2}$$

where I_Q is the quiescent bias current and R_{in} is the single-ended input resistance, which is determined by:

$$R_{in} = \frac{R_3 \times (M + N + 1)}{M^2} \tag{3}$$

where R_3 is the IF termination resistance and M and N are the turns ratios of the output windings of the feedback trans-

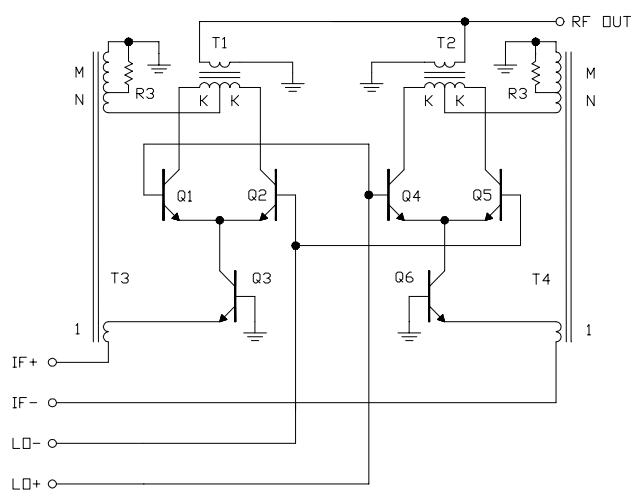

Fig. 1 - Lossless Feedback Double-Balanced Active Mixer

formers. For proper matching, the input impedance of the output winding of the feedback transformers must equal the impedance of the centre tap of the primary winding of hybrid transformers T_1 and T_2, respectively:

$$R_{CT} = 2 \times K^2 \times R_L = (M+N) \times R_3 \tag{4}$$

where K is the turns ratio of the hybrid transformers T_1 and T_2 [7]. This relationship provides for designing the lossless feedback active mixer in terms of K, M, and N, leaving R_3 as a dependent variable:

$$R_3 = \frac{2 \times K^2 \times R_L}{M+N} \tag{5}$$

By substituting (4) into (3), we can determine that the single-ended input impedance of the mixer is:

$$R_{in} = \frac{2 \times K^2 \times R_L \times (M+N+1)}{M^2 \times (M+N)} \tag{6}$$

The two pairs of differential currents from the collectors of the switching transistor pairs Q_1/Q_2 and Q_4/Q_5 are combined by hybrid transformers T_1 and T_2, resulting in a differential pair of feedback currents at the primary winding centre taps

$$I_{FB1} = I_Q + \frac{A \times Cos\ \omega_S\ t}{R_{in}} \tag{7}$$

$$I_{FB2} = I_Q - \frac{A \times Cos\ \omega_S\ t}{R_{in}} \tag{8}$$

which are then conducted to the output windings of the feedback transformers T_3 and T_4, respectively, thus forming the negative feedback path necessary for linearization by way of magnetic coupling to the input windings. The secondary windings of hybrid transformers T_1 and T_2 produce an RF (or IF) output current and voltage

$$i_{out} = 2 \times A \times K^2 \times \times \frac{Cos\ (\omega_S - \omega_L)\ t + Cos\ (\omega_S + \omega_L)\ t}{R_{in}} \tag{10}$$

$$v_{out} = 2 \times A \times K^2 \times R_L \times \times \frac{Cos\ (\omega_S - \omega_L)\ t + Cos\ (\omega_S + \omega_L)\ t}{R_{in}} \tag{11}$$

III. Noise Sources

The lossless feedback active mixer has been shown to be an effective topology for low IMD, although not dealing effectively with the aspect of NF, despite the fact that the feedback topology introduces no noise sources. The NF of common-base drivers is known to increase monotonically with increasing bias current and in general tends to be higher than that of common-emitter drivers [9]. If the gain and output noise power of the driver stages were to be constant across all frequencies, the square-wave switching process would increase the input-referred noise contribution from the driver stage by a factor of $(\pi/2)^2$, or 3.9dB. This is a result of the square-wave LO and its harmonics mixing noise at various frequencies to the IF, and on a linear scale the overall noise power of the mixer would be:

$$NF = N_D \times \left(\frac{\pi}{2}\right)^2 + N_{SW} \tag{12}$$

where N_{SW} is the noise contribution from the differential switching transistor pairs Q_1/Q_2 and Q_4/Q_5, and N_D is the input-referred noise of the driver transistors Q_3 and Q_6, consisting of base shot noise (N_b), collector shot noise (N_c), and thermal noise (N_t) [9, 10]:

$$N_D = 1 + N_c + N_b + N_t \tag{13}$$

If all the transistors in the mixer are identical, we can readily determine from (12) that the resulting NF is twice that of a single transistor plus an additional 3.9dB from the spectral folding. If the driver transistors could be removed from the mixer circuit of Fig. 1, then the resultant NF of (12) could potentially be reduced to that of just the switching transistors themselves.

IV. Circuit Reduction

Upon close examination of Fig. 1, it can be seen the driver transistors Q_3 and Q_6 can in fact be removed without compromising the operation of the mixer. The switching transistor pairs Q_1/Q_2 and Q_4/Q_5 now constitute the common-base amplifying transistor for the lossless feedback topology. This modification of the circuit, shown in Fig. 2, not only reduces it's complexity, but in addition reduces the required supply voltage as the V_{CE} overhead for the driver transistors is no longer required.

Also shown in Fig. 2 is the removal of the taps on the

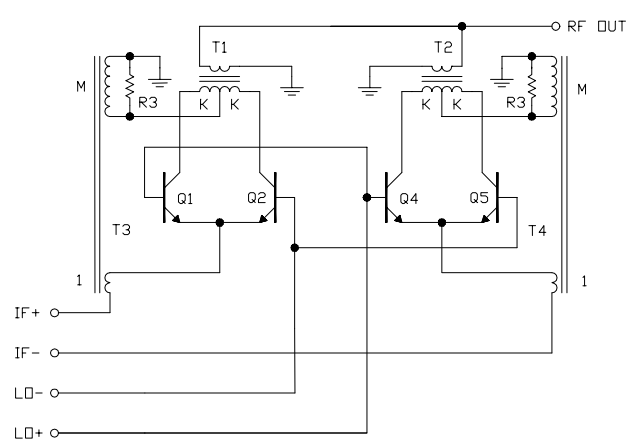

Fig. 2 - Low Noise Lossless Feedback Double-Balanced Active Mixer

output winding of the feedback transformers. In the lossless feedback mixer, the amplified IF signal is terminated by the IF load resistors R_3 and the output impedance of the mixer is determined by the hybrid transformers the feedback transformer output winding. Therefore, the taps on the output windings of the feedback transformers T_3 and T_4 are unnecessary for the overall performance of the mixer. The value of R_3 can then be determined to satisfy the required matching between the feedback transformers and the hybrid transformers which, from (5), is now found by:

$$R_3' = \frac{2 \times K^2 \times R_L}{M} \tag{14}$$

This modification also affects the determination of the single-ended input impedance of the mixer, which, from (6), is now determined by:

$$R_{in}' = \frac{R_3 \times (M+1)}{M^2} = \frac{2 \times K^2 \times R_L \times (M+1)}{M^3} \tag{15}$$

with the differential input impedance of the mixer being twice this amount.

Although the removal of the tap from the output winding of the feedback transformers does not result in an appreciable reduction of the circuit complexity, it does result in a reduction in the cost of fabricating the transformers which, together with the physical layout of the circuit, is further alleviated if the turns ratio is kept to whole numbers. With this in mind an abbreviated list of possible configurations, assuming 50 ohm source and load impedances, is shown in Table 1.

V. Experimental Results

For the purposes of demonstration, a representative low-noise lossless feedback active mixer was constructed and evaluated. The NEC UPA821TF dual transistor was chosen for this study as it has a low NF (1.2dB) at a relatively high collector current (7mA), which is a desirable characteristic for simultaneously obtaining good IMD and NF performance. Although the device is not a true monolithic dual, the fact that the two die are immediately adjacent on the wafer is sufficient to ensure close matching between the two devices. Ideally, a monolithic quad of transistors would be preferred.

Strictly for the purpose of convenience, a feedback transformer turns ratio of 3:4 was chosen from Table 1. This results in a 200 ohm differential input impedance, which will allow the use of a simple 1:1:1 balun transformer for coupling the input IF signal to the mixer. Identical 1:1:1 transformers were used for the hybrid transformers and for the balun transformer coupling the LO signal, with a 200 ohm resistor connected across the base terminals of the switching transistors to provide proper matching for the LO signal.

TABLE 1
Low Noise Lossless Feedback Mixer Design Parameters

K	R_{CT}	M	R_{in}	R_3	Conversion Gain
1	100	4/3	98.4	75.0	-5.95dB
1	100	7/4	51.3	57.1	-3.12dB
1	100	7/3	26.2	42.9	-0.21dB
1	100	7/2	10.5	28.6	+3.77dB

All transformers were fabricated on Fair-Rite 2843002302 ferrite binocular cores using #46 AWG wire. Overall construction was keep compact (less than 2cm square) so as to keep all track lengths as short as practical, as high frequency feedback circuits such as this are notoriously unforgiving with regard to excessive time and phase delays in the feedback networks.

An LO signal having a frequency of 20MHz and a level of 0dBm was used for all testing. For the two-tone intermodulation tests, signal frequencies of 10.9MHz and 11.1MHz were used, resulting in upper sideband RF output signal frequencies of 30.9MHz and 31.1MHz. The bias networks were adjusted to keep V_{CE} constant at 3.0V, 5.0V, and 8.0V while adjusting I_E over a range that would give adequate data to determine the range of IMD and NF performance.

The test results, shown in Fig. 3, indicate that the removal of the driver transistors has had the desired effect. Referring to the 8V data, the NF has been reduced to less than 5.9dB while at the same time the input intermodulation intercept point (IIP_3) remains above +27dBm for an emitter bias current (I_E) of just 3.9mA per side. The IMD performance drops below +25dBm rapidly for I_E below 3.0mA while

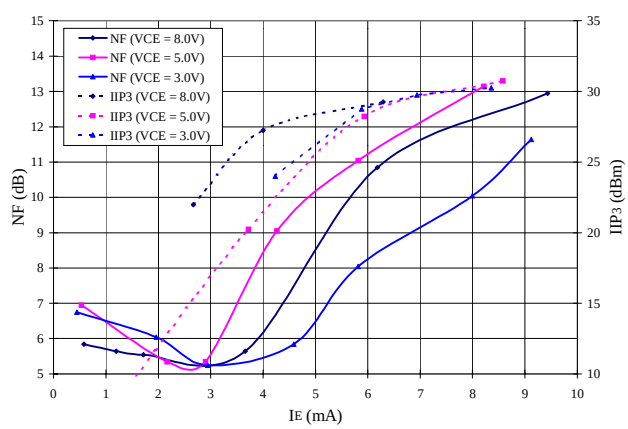

Figure 3 - Low Noise Lossless Feedback Mixer Intermodulation and Noise Figure Performance

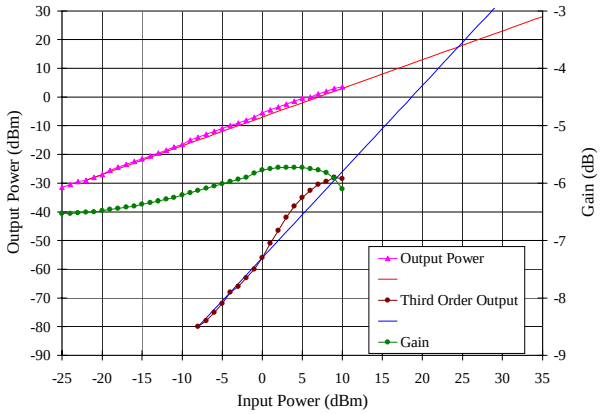

Figure 4 - Low Noise Lossless Feedback Mixer Gain and Intermodulation Performance (V_{CE} = 3V, I_E = 4.5mA)

the improved NF performance remains constant until I_E is decreased below 2mA, at which point the IIP_3 performace has dropped below +20dBm. For V_{CE} of 3V the region of low NF is considerably wider while the IIP_3 decreases rapidly below +25dBm for I_E less than 4.9mA. For V_{CE} of 5V a NF of less than 6dB occurs well below the point at which the IIP_3 begins to drop off. In terms of IIP_3, there is little advantage to operation at these lower voltages, however the broad region of low NF performance at 3V V_{CE} is certainly worthy of consideration.

Fig. 4 illustrates the typical gain and IMD performance of the low noise lossless feedback mixer, the bias in this case being 3V V_{CE} and 4.5mA I_E. The slight amount of gain and intermodulation ratio (IR) expansion is common for feedback circuits of this nature. Compression is abrupt, owing to the tight coupling provided by the feedback transformers.

VI. Performance Comparison

Table 2 summarizes the IIP_3, 1dB compression point (P_{1dB}), gain, and NF performance for the circuit described herein. Performance data for previous realizations, a comparable Gilbert Cell mixer, and the Mini-Circuits SBL-1 diode ring mixer are included for the purpose of comparison [6]. It can be readily seen that the noise performance of the low noise lossless feedback mixer is a subtantial improvement over the other classes of active mixers, and is comparable to that of the SBL-1 while at the same time providing substantially higher IMD performance. The low noise lossless feedback mixer has a significant advantage over the SBL-1 as the former requires only 0dBm of LO power whereas the latter requires +7dBm. This advantage becomes more significant when the intermodulation performance is brought into consideration, as a Class III diode ring mixer with comparable IMD performance will require as much as +17dBm of LO power.

TABLE 2
Mixer Performance Characteristics

Configuration	IIP_3	P_{1db}	Gain	NF
Mini-Circuits SBL-1	+19dBm	-4.5dBm	-6dB	6.0dB
Gilbert Cell	+15.75dBm	+4.5dBm	-2.5dB	11.89dB
Type 2 Series/Shunt	+28dBm	+4dBm	-4dB	14.38dB
Lossless Feedback	+30.3dBm	+3dBm	-6dB	13.80dB
Low Noise Lossless Feedback	+27.0dBm	+4dBm	-6dB	5.9dB

VII. Conclusions

It has been shown earlier that the application of lossless feedback to the design of active mixers is an effective means for improving intermodulation performance over the common Gilbert Cell mixer. It has now been demonstrated that the lossless feedback topology is an effective means by which the single greatest contributor to the NF of active mixers may be removed while still retaining the highly desireable intermodulation characteristics of earlier implementations. Test results shown here indicate that the removal of the driver transistors from the earlier lossless feedback active mixer results in a substantial improvement in NF performance, and that the application of feedback topologies to the common Gilbert Cell mixer continues to provide a substantial improvement in dynamic range.

References

[1] Seader, L.Dand J.E. Sterrett, "*Unit Transistor Amplifier with Matched Input and Output Impedances,*" US Patent 3,493,882, 3 February 1970.

[2] Norton, David E. and Allen F. Podell, "Transistor Amplifier with Impedance Matching Transformer," U.S. Patent 3,891,934, 24 June 1975.

[3] Trask, Chris, "Feedback Technique Improves Active Mixer Performance," *RF Design*, September 1997, pp. 46-52.

[4] Trask, Chris, "A Linearized Active Mixer," *Proceedings RF Design 98*, San Jose, California, October 1998, pp. 13-23.

[5] Trask, Chris, "Active Double-Balanced Mixer with Embedded Linearization Amplifiers," US Patent 6,140,849, 31 October 2000.

[6] Trask, Chris, "High Dynamic Range Double-Balanced Active Mixers Using Lossless Feedback," *Proceedings of the 2000 IEEE International Symposium on Circuits and Systems*, Vol. 3, pp. 41-44.

[7] Sartori, Eugene F., "Hybrid Transformers," *IEEE Transactions on Parts, Materials, and Packaging*, Vol. PMP-4, No. 3, September 1968, pp. 59-66.

[8] Fong, K.L. and R.G. Meyer, "Monolithic RF Active Mixer Design," *IEEE Transactions on Circuits and Systems*, Vol. 46, No. 3, March 1999, pp. 231-239.

[9] Hull, C.D., "Analysis and Optimization of Monolithic RF Downconversion Receivers," Ph.D. dissertation, University of California Berkeley, 1992.

[10] Fong, K.L., "Design and Optimization Techniques for Monolithic RF Downconversion Mixers," Ph.D. dissertation, University of California Berkeley, 1997.

[11] Patent pending